Final Report: 3D Spatial Mapping System

McMaster University
Microprocessors Project Course

Christina Bridges
April 7, 2026

Device Overview

General Description

The embed spatial measurement system collects distance information from the environment to create a corresponding 3D reconstructed image. The system primarily comprises of a MSP432E401Y MCU, VL53L1X time-of-flight (ToF) sensor, 24BYJ28 stepper motor, and ULN2003 driver. The MCU uses an Arm Cortex-M4F processor core and is set to operate with a bus speed at 26 MHz. The ToF is mounted to a stepper motor that rotates between each sample to obtain a 360° collection of data points along the y-z axis using a 3D printed attachment component. The device should be manually moved in a continuous, linear direction at 30 cm increments between each sampling cycle to obtain an accurate mapping in the x-direction. The ToF sensor transmits a pulsing optical signal that reflects off environmental surfaces and returns to the receiver. The distance is then computed after ADC and trigonometrically converted to yz-coordinates which is sent to the. The stepper motor rotates every 11.25°, where the ToF samples the distance at each angle increment, to produce a total of 32 samples for a full 360° rotation. The stepper motor is connected to the ULN2003 driver to step up the current provided by the MCU to a sufficient magnitude for operation. The ToF communicates with the MCU via I2C using the lines SDL and SCL while the MCU communicates with the PC via UART protocol. The ToF can be configured to operate for three distance modes, and a particular distance mode should be selected to optimize ambient light with maximum distance requirement. One on-board push button controls the start of the data acquisition process for one full 360° rotation. The reset button can be used to stop the entire data acquisition and movement process. The total cost of the device is around $350 as the MCU is ~$300 and peripherals are < $50. The language on the receiver side is MATLAB.

Features

- 32 data points per 360° scan cycle

TI MSP432E401Y MCU

- 32-bit ARM Cortex-M4F CPU
- 26 MHz bus speed

VL53L1X ToF sensor

- Accurate ranging up to 4 m
- ToF ranging error ± 20 mm
- 2.6V-3.5V operating voltage

28BYJ-48 Stepper motor

- 4 phases per step for total of 512 steps
- 4 LEDs showing real-time phase status

Spatial Mapping Software

- MATLAB plots UART-transmitted coordinates in a point cloud

Block Diagram

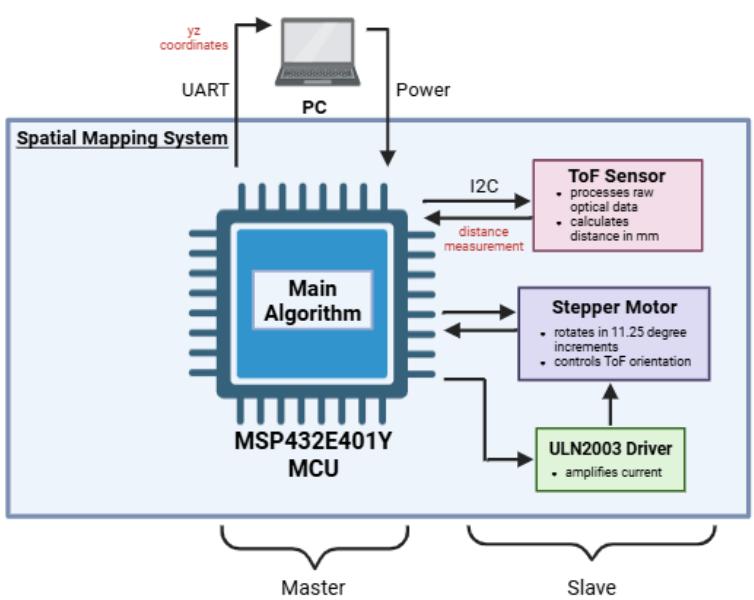

Device Characteristics Table

MCU	
Bus speed	26 MHz
Baud rate	115200 bps
Serial Port	COM7
Scanning control push button	PJ0
Bus speed validation test push button	PJ1
Distance measurement status LED	PF4
UART transmission status LED	PN1
Returning home status LED	PN0

Stepper Motor and Driver	
IN1	PL0
IN2	PL1
IN3	PL2
IN4	PL3
V+	5V
V-	0V

ToF Sensor	
Vin	3.3V
SDA	PB3
SCL	PB2
GND	GND

Detailed Description

Distance Measurement

The VL53L1X ToF sensor obtains one sample per 11.25° angle increment by the stepper motor, corresponding to an increment of 16 steps for the total of 512 steps. The embedded software is configured such that the magnetic coils of the stepper motor are excited in four combinations per step in a full stepping method. The main function flashed to the MCU continuously waits for the scanning control push button upon resetting the device to begin data acquisition.

The ToF sensor transmits a 940 nm infrared laser pulse that reflects off environmental objects to the single photon avalanche diode (SPAD) receiving array. The emitted infrared pulse travels at the speed of light, c, within a measured transmission and receival time, t_{flight}. The distance measurement is thus computed according to the equation:

$$d = c \times \frac{t_{flight}}{2}$$

Following data acquisition, the sensor transduces the optical signal into an electrical signal and filters the signal in preparation for analog-to-digital conversion to ensure compatibility with the MCU. The analog distance measurement is converted into a digital form to transfer via I2C protocol. The ToF transmits distance data in a digital value corresponding to mm units, i.e. the maximum distance measurement of 4 m is represented as 4000.

Prior to obtaining distance data, the ToF sensor is initialized and the configurations are verified by a test trial of reading a byte to the MCU. The sensor is then configured to begin ranging and waits for the availability of a new value in the register. obtained distance measurement is sent to the MCU via I2C. The range status is obtained and can be modified to be sent to the PC to validate the distance measurement where a 0 indicates an accurate measurement whereas a 1 indicates non-ideal measurement conditions (i.e. due to excessive ambient light). Distance measurements are sent to the MCU from the ToF via I2C as seen in the block diagram on page 1.

Prior to every distance measurement, the on-board LED D3 is flashed for visual confirmation. The distance values are converted to y and z values by taking the trigonometric cosine and sine values, respectively. The successive angles used for trigonometry corresponds to $\theta = \frac{n\pi}{16}$, where n = 0,1,2,…32 for a full 360° rotation. The math library is linked in Keil software during the compilation process to perform the trigonometric calculations to obtain the displacement:

$$y = d \times \cos\left(\frac{n\pi}{16}\right), \qquad \text{where n} = 0,1,2,\ldots 32$$

$$z = d \times \sin\left(\frac{n\pi}{16}\right), \qquad \text{where n} = 0,1,2,\ldots 32$$

The yz-coordinates are kept in a buffer prior to being UART transmitted to the PC via a USB cable and a PC-specific COM port. Prior to every UART transmission of distance measurement obtained, the on-board LED D1 is flashed for visual confirmation.

Three distance modes are configurable for the ToF depending on the target conditions. The short, medium, and long-distance modes can capture distance data up to 136 cm, 290 cm, and 360 cm under dark light and can capture 135 cm, 76 cm, and 73 cm under ambient light conditions. Scanning with the device in dark lighting conditions introduces less ambient noise and provides a higher signal to noise ratio. This ultimately improves sensor accuracy, thus allows for a longer distance range.

Visualization

When a press of the scanning control push button is detected, the MCU sends the character ‘s’ to the PC prior to the termination indicator “\r\n” via UART protocol. When read by the MATLAB program, the program exits the standby loop and begins reading and printing the received yz-coordinates in real-time in the command window. Initially, the PC-specific port is set to receive data from the MCU. The baud rate is set to the required 115200 bps and the device is initialized with these setup parameters. The maximum read timeout is set to 30 seconds and the termination sequence is set as “CR/LF” which corresponds to “\r\n” from the microcontroller. Following the complete scan of coordinate pairs, the serial port is closed for the defined device.

The number of data points obtained in one scan is set to 32 corresponding to the 11.25° angle increment. The total number of scans is set to 3 and is modifiable to control the number of slices of the image along the x-axis. All xyz data is obtained prior to producing a visual plot, thus it is important to keep the number of scanning points to a reasonable minimum number as invalid data points cannot be deleted in real-time. The spacing between points along the x-axis is set to 30 mm increments and is modifiable. The x-points are assigned to the scanned yz-coordinates in a successive order from 0 mm to 30 mm × *num_scans.* It is vital to produce a matching x-axis spacing in the physical scanning procedure to ensure an accurate spatial reconstruction is generated.

A spectral plot is then produced from the sampled xyz coordinates with colour characteristics describing the location of points along the z-axis. The generated figure in matlab can be rotated to obtain a 3D visual of the mapped coordinates in different orientations.

Application Instructions

It is assumed that Keil and MATLAB software are setup on the user's device prior to the experiment. Keil should be setup to be compatible with the TI-MSP432E401Y MCU. No additional toolboxes for the MATLAB program are required, however a version of R2019b or later is required.

1. Build the circuit configurations between the MCU and the peripherals according to the pin assignments in the device characteristics table on page 3.
2. Open the Keil project named Deliverable2.uvprojx and translate, build, and download the project assuming no warnings or errors in the terminal.
3. Press the reset button to flash the program onto the board.
4. Connect the USB cable to the MCU and PC to establish a serial connection. The user should search for "Device Manager" in their PC search bar and expand the option "Ports (COM & LPT)" and identify "XDS110 Class Application/User UART (COM#)" to obtain the COM port number indicated by the # position.
5. Open the MATLAB file named *deliverable2_matlab.m* and change the port assignment to your COM port # in the configuration section.
6. To change the distance between sampled points along the x-axis, the variable x_spacing can be modified to another positive integer referring to a distance measurement in mm units. The parameter *num_scans* can also be reasonably modified to increase the number of 2D slices in the yz plane obtained within a target measurement space, thereby increasing spatial resolution.
7. Run the matlab file. This will open the COM port to allow for data transmission from the MCU.
8. Press the scanning control push button (PJ0) on the MCU to begin data acquisition. The motor should turn in a clockwise direction and stop 32 times for sampling by the ToF sensor. The yz-coordinates should be visually printed in the MATLAB command window. Wait for the motor to rotate in the counterclockwise direction and return to the home position.
9. Physically move the motor linearly forward by the predefined x_spacing units in mm.
10. Repeat steps 7 to 9 until the number of scans taken equals the predefined value *num_scans*
11. View the generated 3D spectral plot of xyz data points generated by MATLAB once all data points are collected.

Expected Output

An experimental trial of the project was performed with 32 scanning points along the x-axis at a distance of 30 cm between scans. The spatial mapping system was applied to the hallway in Figure 1 and yielded the plot in Figure 2. The main hallway feature is the increase in hallway width at about 3 m from the reference point. The spectral 3D plot accurately displays this feature at about 3 m. The physical implementation of the device is visible in Figure 3.

Figure 1: Image of assigned hallway for scanning

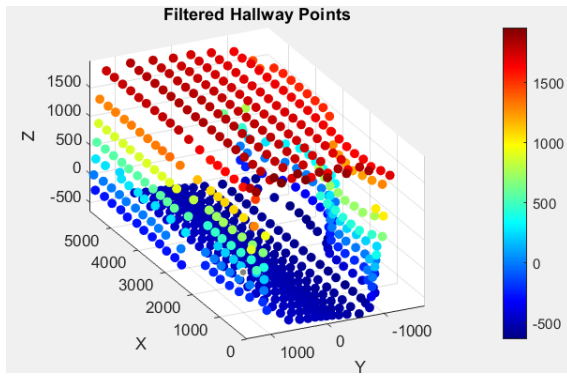

Figure 2: 3D plot of assigned hallway created in MATLAB

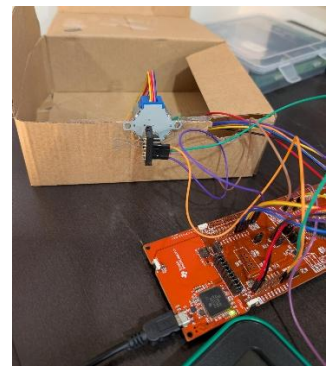

Figure 3: Physical implementation of MCU and peripherals

Limitations

The ToF sensor has a maximum distance capture of 4 m which limits the spatial mapping systems to smaller spaces. The maximum ranging distance is also highly variable on the experimental lighting conditions, with more ambient light introducing more ambient noise and thus a smaller maximum ranging distance. The minimum ranging distance is 4 cm, where the ToF will detect an object but will determine an inaccurate measurement.

The ToF sensor does not produce accurate measurements for translucent mediums. The largest edge case was found to occur when scanning through a glass medium, as the transmitted photons from the ToF sensor go through this translucent medium and do not return to the receiver, or are received in a very unpredictable manner, which produces an erroneous outlier.

A mechanical limitation arises due to the inconvenient orientation of the wires that extend out the back of the ToF sensing module. The wires rotate with the stepper motor and can obstruct the sensor arrays during the scanning process, causing an inaccurate measurement that may appear as an outlier on the 3D plot.

The number of rotations in a continuous direction during the sampling process are limited due to the tangling of the wires during the winding process. Thus, after each scanning period, the motor returns to the home position in the opposite direction to untangle wires, which introduces wasted time that could be used for another scanning period.

The resolution and speed are a very important offset to consider for the device. To achieve a higher resolution, a greater number of data points are required per scan at a smaller angle increment for the motor. A smaller increment requires the ToF sensor to stop more frequently to take a measurement, which can increase the scanning time significantly and introduce inefficiency for experiments with a large number of scans. If speed is prioritized above resolution, the number of data points can be reduced to decrease the time required for the ToF to complete one scanning period, however the 3D plot may not include data points that describe higher resolution features in the physical environment. Multiple numbers of data points were tested to determine the optimal speed and resolution for the scanning experiment. It was determined that 32 data points at an angle of 11.25 degrees provided sufficient resolution and a reasonable sampling time.

The x-axis spacing between each scan must be approximated in the current setup. The experimental trial involved a measuring tape to provide an estimate between scanning locations which introduces systematic and human error. It would be beneficial to produce a standardized moving system that physically increments the device along the x-axis in a linear motion.

Depending on the application of the ToF sensor (i.e. modified for a large spatial mapping system), it may be necessary to have an even higher resolution of distance measurement magnitude via a higher-bit ADC.

Circuit Schematic

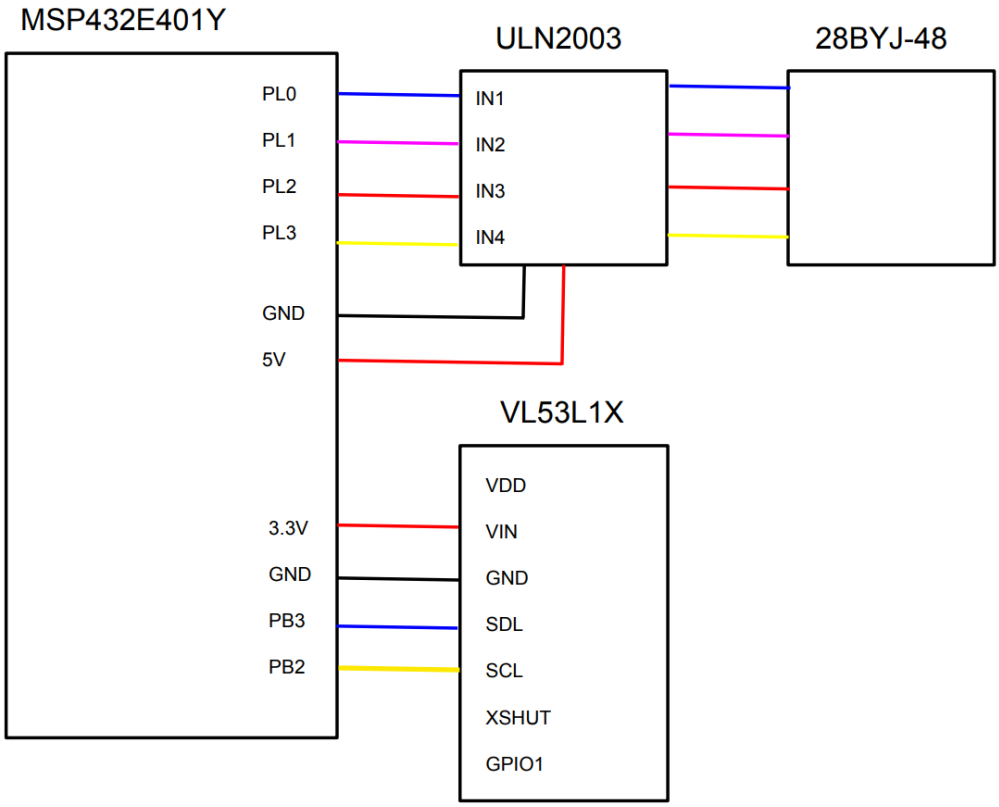

Figure 4: Circuit schematic of MCU and peripherals

Programming Logic Flowchart

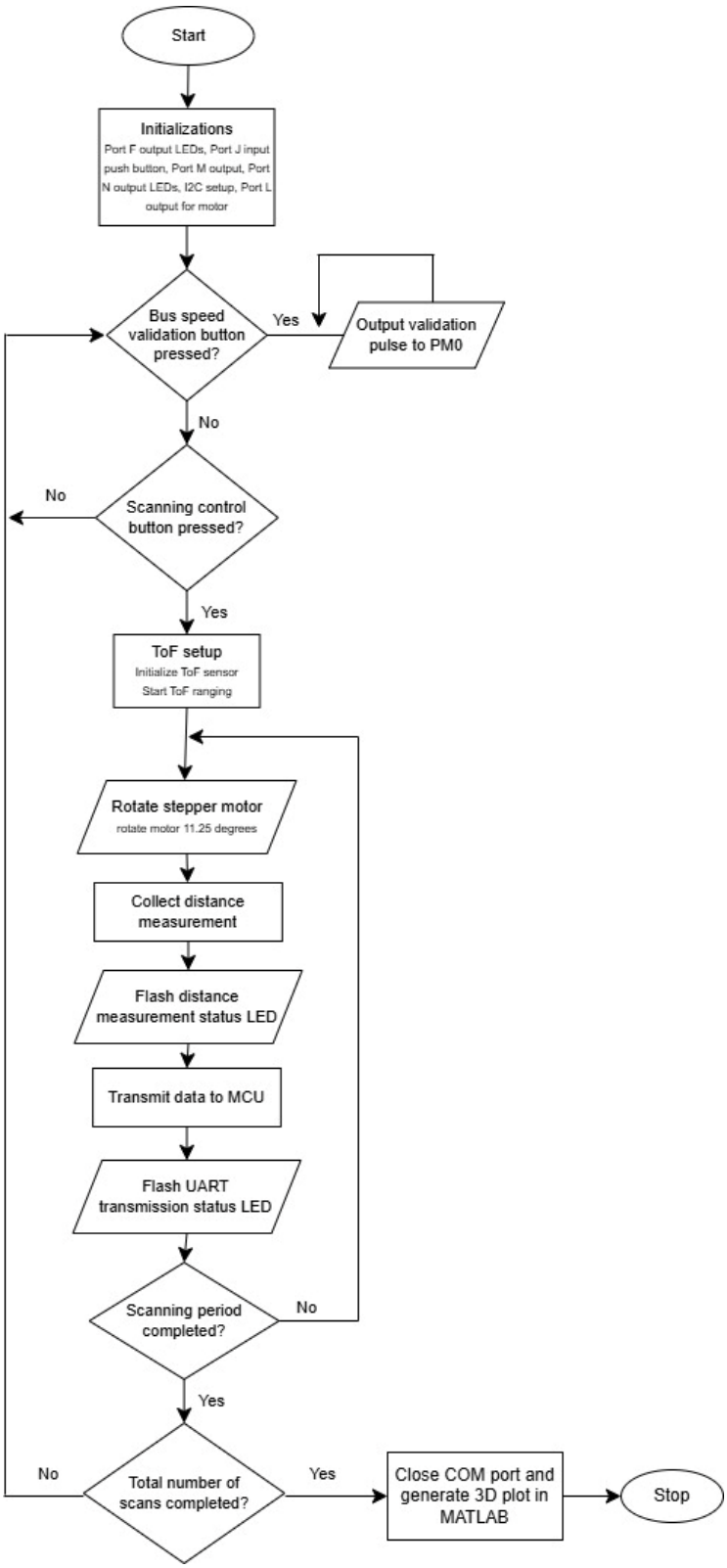

Figure 5: Programming flowchart of spatial mapping system